JINPAT
Since 1996

◎SR - XX - B / C

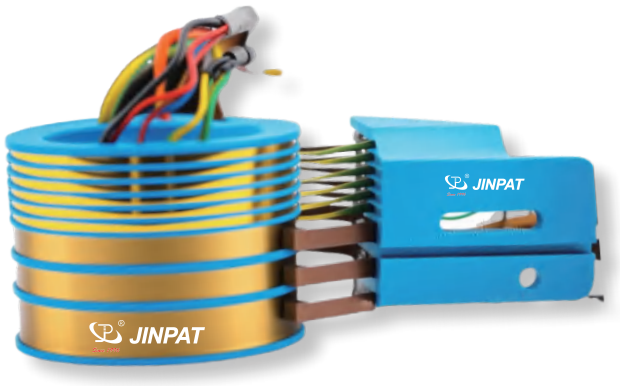

Features

◎ Inner diameter: 50 mm (60 / 70 mm optional)

◎ Custom ring and cable configurations

◎ Optional brush block designs

◎ Can withstand industrial environments

◎ Multiple mounting options for flexible integration

Typical Applications

- Medical Engineering

Data

Number of rings: Max. 9

Current per ring: 3 Circuits* 10A and 6Circuits* 2A

Voltage: 48VDC

Dielectric strengh: ≥500VAC@50Hz

Insulation resistance: ≥100MΩ@500VDC

Rotation speed: 0~20rpm

Protection class: IP00

Operating temperature: -20 °C~80 °C

Electrical connection: customization (flying leads, cables or connectors)

Housing material: Engineering plastics

Design Example

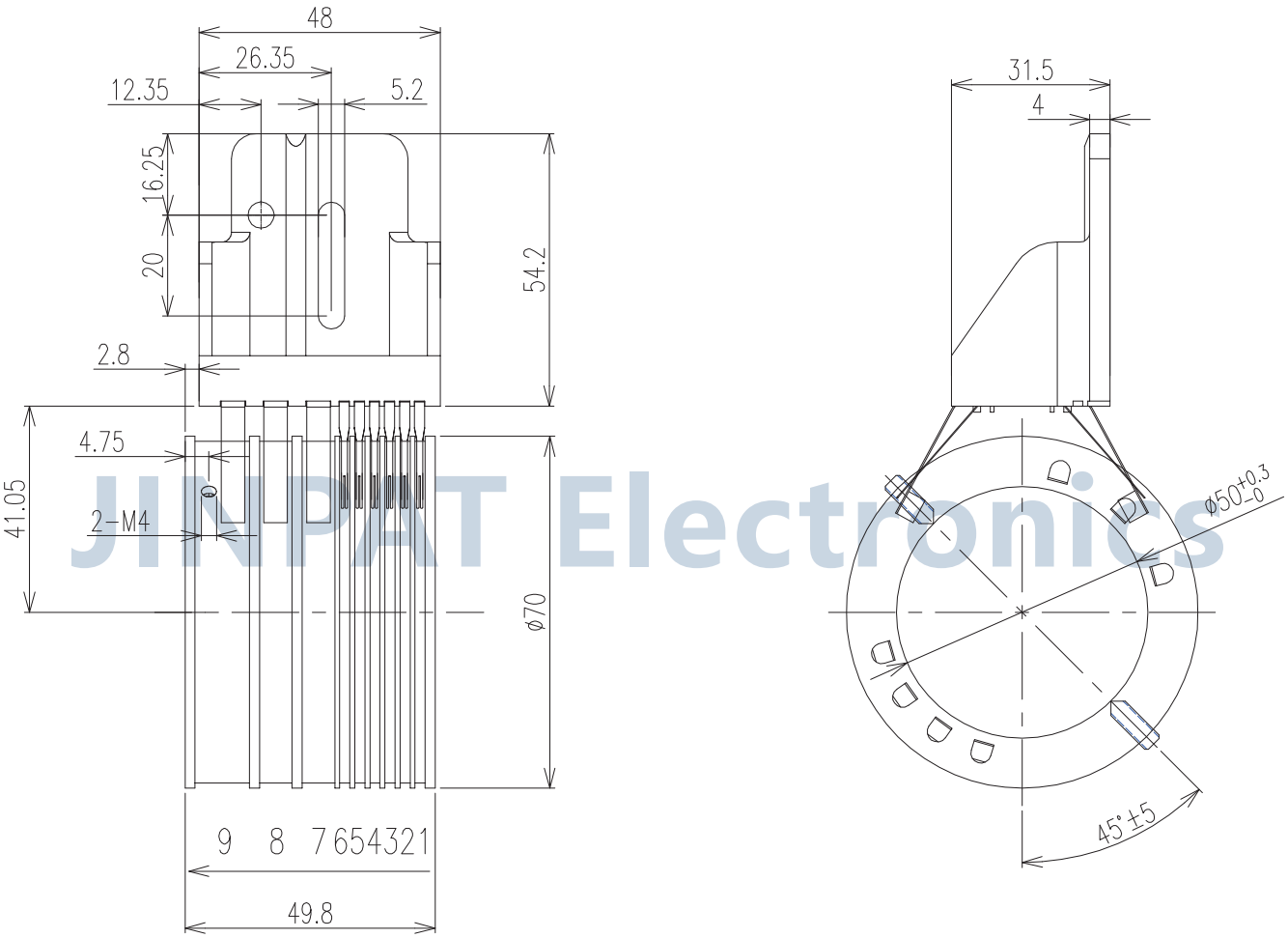

JINPAT Electronics

JINPAT Electronics CO.LTD
No. 496, Huarong Road, Dalang Street,
Longhua District, Shenzhen, Postal Code 518109
Tel: +86-755-8204 2235
Email: sales@slipring.cn
www.slipring.cn