JINPAT
Since 1996

◎SR - XX - F / M

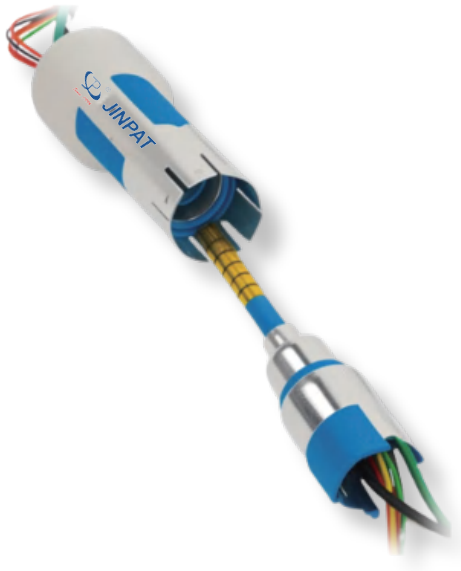

Features

◎ Outer diameter max. 29 mm
◎ Custom designs available
◎ Supports high-frequency signals
◎ Fieldbus compatible
◎ Smooth signal transmission
◎ Modular structure for easy maintenance
◎ Low friction design for extended service life
◎ Optional EMC shielding to reduce electromagnetic interference

Typical Applications

- Medical Arm

Data

Number of rings: Max. 9
Current per ring: 3 Circuits* 10A and 6 Circuits* 2A
Voltage: 48VDC
Dielectric strengh: ≥500VAC@50Hz
Insulation resistance: ≥100MΩ@500VDC
Rotation speed: 0~5rpm
Protection class: IP00
Operating temperature: -20 °C~80 °C
Electrical connection: customization (flying leads, cables or connectors)
Housing material: Engineering plastics

Design Example

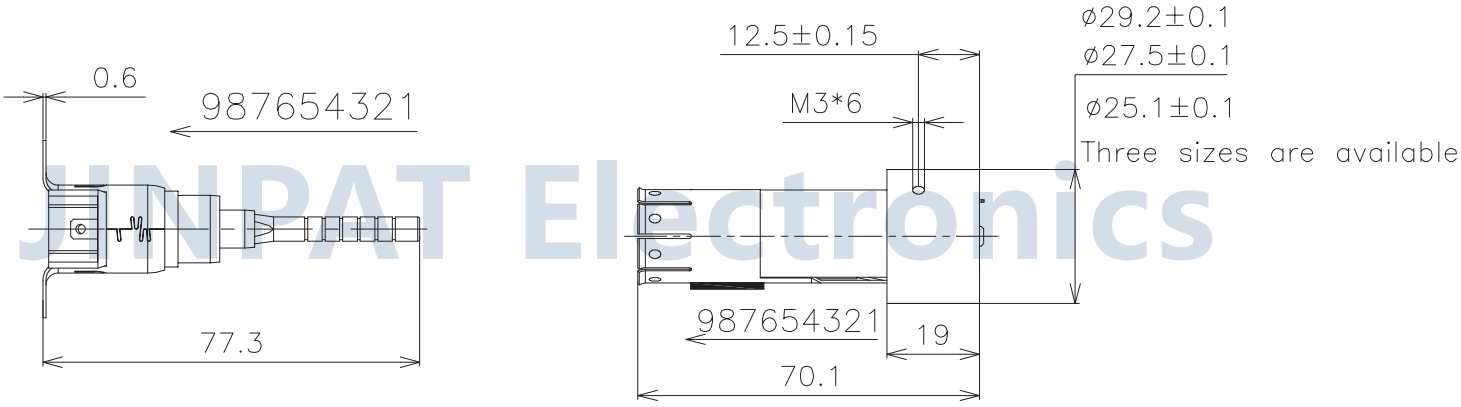

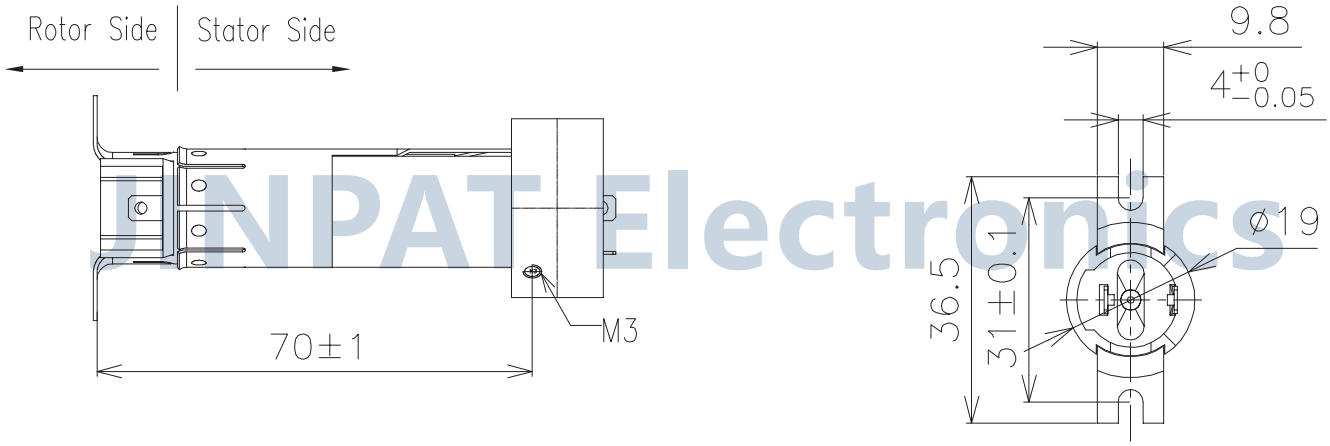

JINPAT Electronics
JINPAT Electronics

JJINPAT Electronics CO.LTD
No. 496, Huarong Road, Dalang Street,
Longhua District, Shenzhen, Postal Code 518109
Tel: +86-755-8204 2235
Email: sales@slipring.cn
www.slipring.cn